TOP VIEW

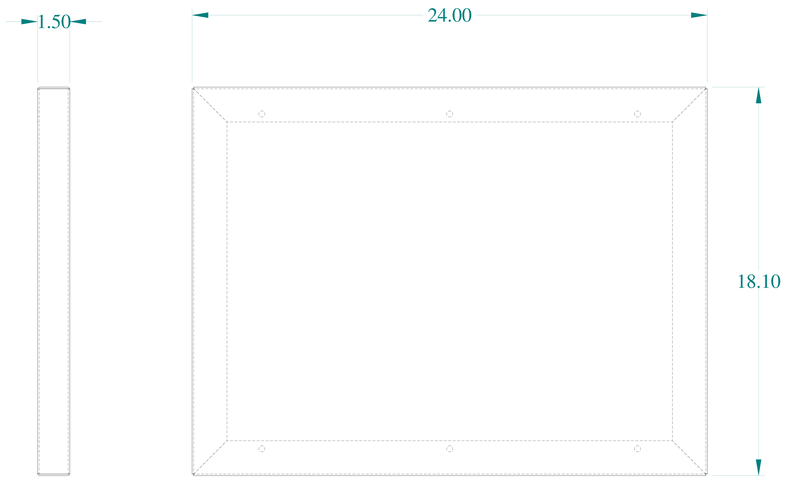


SIDE VIEW

FRONT VIEW

SIDE VIEW

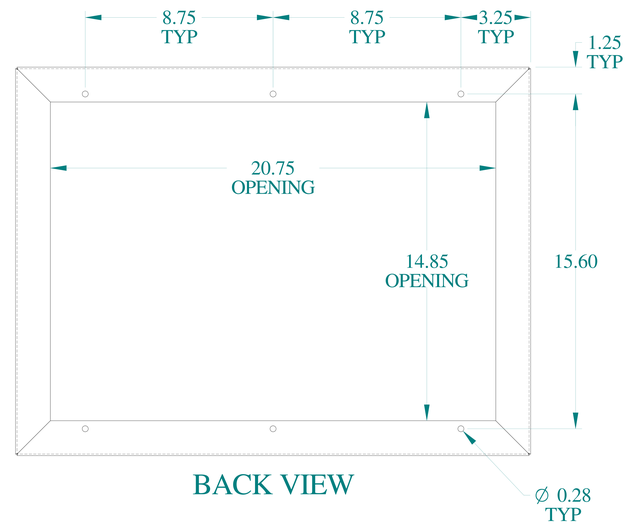


BACK VIEW

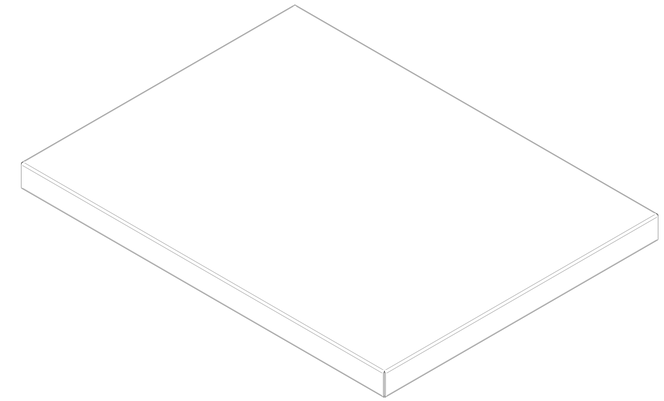

ISOMETRIC VIEWS

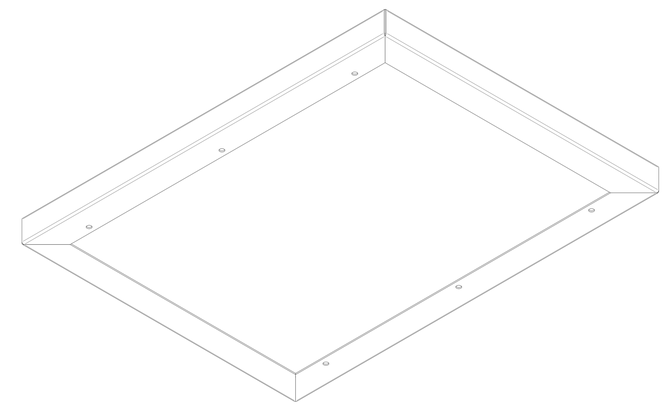

BOTTOM VIEW

HAMMOND MANUFACTURING®

www.hammondmfg.com

Data subject to change without notice.

| | |
|---|---|
| Part # : 2CPBC2436 | Date : Mar. 24, 2019 |

Link:www.hammfg.com/2CPBC2436