SIEMENS

Data sheet 3SU1130-2BF60-3MA0-Z X90

Selector switch, illuminable, 22 mm, round, plastic with metal front ring, white, selector switch, short, 2 switch positions O-I, latching, actuating angle 90°, 10:30h/13:30h, with holder, 1 NO, 1 NC, spring-type terminal, Z=20-unit packaging

product brand name	SIRIUS ACT
product designation	Selector switches
design of the product	Complete unit
product type designation	3SU1
product line	Plastic with metal front ring, matt, 22 mm
manufacturer's article number	
• of supplied contact module at position 1	3SU1400-1AA10-3BA0
• of supplied contact module at position 2	3SU1400-1AA10-3CA0
• of the supplied holder	3SU1550-0AA10-0AA0
• of the supplied actuator	3SU1032-2BF60-0AA0
Enclosure	
number of command points	1
Actuator	
design of the actuating element	Selector, short
principle of operation of the actuating element	latching, 90° (10:30 h/13:30 h)
product extension optional light source	Yes
color of the actuating element	white
material of the actuating element	plastic
shape of the actuating element	round
outer diameter of the actuating element	32.3 mm
number of contact modules	2
number of switching positions	2
actuating angle	
• clockwise	90°
Front ring	
product component front ring	Yes
design of the front ring	standard
material of the front ring	Metal, matt
color of the front ring	sand gray
Holder	
material of the holder	Plastic
Display	
number of LED modules	0
General technical data	
product function positive opening	Yes
product component light source	No
insulation voltage rated value	500 V
degree of pollution	3
type of voltage of the operating voltage	AC/DC
surge voltage resistance rated value	6 kV

Subject to change without notice
© Copyright Siemens

protection class IP	IP66, IP67, IP69(IP69K)
● of the terminal	IP20
degree of protection NEMA rating	1, 2, 3, 3R, 4, 4X, 12, 13
shock resistance	
● **according to IEC 60068-2-27**	sinusoidal half-wave 15g / 11 ms
● for railway applications according to EN 61373	Category 1, Class B
vibration resistance	
● **according to IEC 60068-2-6**	10 ... 500 Hz: 5g
● for railway applications according to EN 61373	Category 1, Class B
operating frequency maximum	1 800 1/h
mechanical service life (operating cycles) typical	1 000 000
electrical endurance (operating cycles) typical	10 000 000
thermal current	10 A
reference code according to IEC 81346-2	S
continuous current of the C characteristic MCB	10 A; for a short-circuit current smaller than 400 A
continuous current of the quick DIAZED fuse link	10 A
continuous current of the DIAZED fuse link gG	10 A
Substance Prohibitance (Date)	10/01/2014
operating voltage	
● at AC	
— at 50 Hz rated value	5 ... 500 V
— at 60 Hz rated value	5 ... 500 V
● at DC rated value	5 ... 500 V
Power Electronics	
contact reliability	One maloperation per 100 million (17 V, 5 mA), one maloperation per 10 million (5 V, 1 mA)
Auxiliary circuit	
design of the contact of auxiliary contacts	Silver alloy
number of NC contacts for auxiliary contacts	1
number of NO contacts for auxiliary contacts	1
Connections/ Terminals	
type of electrical connection	spring-loaded terminals
● of modules and accessories	Spring-type terminal
type of connectable conductor cross-sections	
● solid without core end processing	2x (0.25 ... 1.5 mm²)
● finely stranded with core end processing	2x (0.25 ... 0.75 mm²)
● finely stranded without core end processing	2x (0.25 ... 1.5 mm²)
● for AWG cables	2x (24 ... 16)
tightening torque of the screws in the bracket	1 ... 1.2 N·m
Safety related data	
B10 value with high demand rate according to SN 31920	100 000
proportion of dangerous failures	
● with low demand rate according to SN 31920	20 %
● with high demand rate according to SN 31920	20 %
failure rate [FIT] with low demand rate according to SN 31920	100 FIT
Ambient conditions	
ambient temperature	
● during operation	-25 ... +70 °C
● during storage	-40 ... +80 °C
environmental category during operation according to IEC 60721	3M6, 3S2, 3B2, 3C3, 3K6 (with relative air humidity of 10 ... 95%, no condensation in operation permitted for all devices behind front panel)
Installation/ mounting/ dimensions	
fastening method	
● of modules and accessories	Front plate mounting
height	40 mm
width	32.3 mm
shape of the installation opening	round
mounting diameter	22.3 mm
positive tolerance of installation diameter	0.4 mm
mounting height	28.8 mm
installation width	32.3 mm

Subject to change without notice
© Copyright Siemens

installation depth	49.7 mm

Certificates/ approvals

Further information

Siemens has decided to exit the Russian market (see here).
https://press.siemens.com/global/en/pressrelease/siemens-wind-down-russian-business

Siemens is working on the renewal of the current EAC certificates.
Please contact your local Siemens office on the status of validity of the EAC certification if you intend to import or offer to supply these products to an EAC relevant market (other than the sanctioned EAEU member states Russia or Belarus).

Information on the packaging
https://support.industry.siemens.com/cs/ww/en/view/109813875

Information- and Downloadcenter (Catalogs, Brochures,…)
https://www.siemens.com/ic10

Industry Mall (Online ordering system)
https://mall.industry.siemens.com/mall/en/en/Catalog/product?mlfb=3SU1130-2BF60-3MA0-Z X90

Cax online generator
http://support.automation.siemens.com/WW/CAXorder/default.aspx?lang=en&mlfb=3SU1130-2BF60-3MA0-Z X90

Service&Support (Manuals, Certificates, Characteristics, FAQs,...)
https://support.industry.siemens.com/cs/ww/en/ps/3SU1130-2BF60-3MA0-Z X90

Image database (product images, 2D dimension drawings, 3D models, device circuit diagrams, EPLAN macros, ...)
http://www.automation.siemens.com/bilddb/cax_de.aspx?mlfb=3SU1130-2BF60-3MA0-Z X90&lang=en

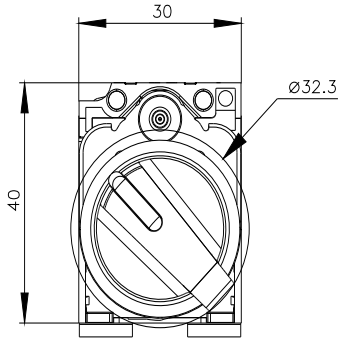

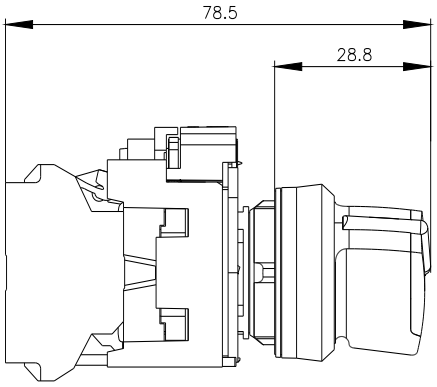

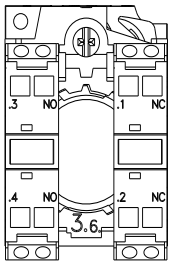

Subject to change without notice
© Copyright Siemens

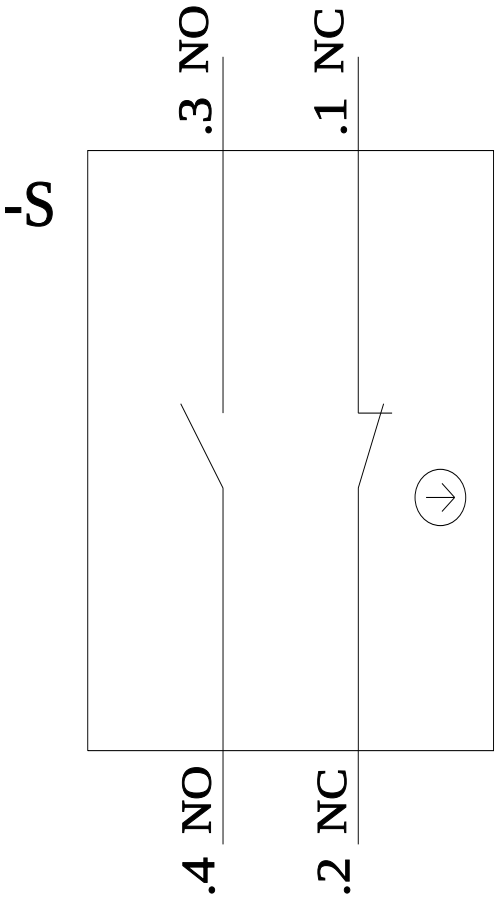

last modified: 1/26/2022

Subject to change without notice
© Copyright Siemens