SIEMENS

## Data sheet US2:14JUH32BF

Non-reversing motor starter, Size 4, Three phase full voltage, Solid-state overload relay, OLR amp range 50-200A, 110V 50Hz / 120V 60Hz coil, Non-combination type, Enclosure type 1, Indoor general purpose use, Standard width enclosure

| | |
|---|---|
| product brand name | Class 14 |
| design of the product | Full-voltage non-reversing motor starter |
| special product feature | ESP200 overload relay |
| **General technical data** | |
| weight [lb] | 35 lb |
| Height x Width x Depth [in] | 25 × 14 × 9 in |
| touch protection against electrical shock | (NA for enclosed products) |
| installation altitude [ft] at height above sea level maximum | 6560 ft |
| ambient temperature [°F] | |
| ● during storage | -22 ... +149 °F |
| ● during operation | -4 ... +104 °F |
| ambient temperature | |
| ● during storage | -30 ... +65 °C |
| ● during operation | -20 ... +40 °C |
| country of origin | USA |
| **Horsepower ratings** | |
| yielded mechanical performance [hp] for 3-phase AC motor | |
| ● at 200/208 V rated value | 40 hp |
| ● at 220/230 V rated value | 50 hp |
| ● at 460/480 V rated value | 100 hp |
| ● at 575/600 V rated value | 100 hp |
| **Contactor** | |
| size of contactor | NEMA controller size 4 |
| number of NO contacts for main contacts | 3 |
| operating voltage for main current circuit at AC at 60 Hz maximum | 600 V |
| operational current at AC at 600 V rated value | 135 A |
| mechanical service life (operating cycles) of the main contacts typical | 5000000 |
| **Auxiliary contact** | |
| number of NC contacts at contactor for auxiliary contacts | 0 |
| number of NO contacts at contactor for auxiliary contacts | 1 |
| number of total auxiliary contacts maximum | 7 |
| contact rating of auxiliary contacts of contactor according to UL | 10A@600VAC (A600), 5A@600VDC (P600) |
| **Coil** | |
| type of voltage of the control supply voltage | AC |
| control supply voltage | |
| ● at AC at 50 Hz rated value | 110 V |
| ● at AC at 60 Hz rated value | 120 V |
| holding power at AC minimum | 22 W |
| apparent pick-up power of magnet coil at AC | 510 VA |


Subject to change without notice
© Copyright Siemens

| | |
|---|---|
| apparent holding power of magnet coil at AC | 51 VA |
| operating range factor control supply voltage rated value of magnet coil | 0.85 ... 1.1 |
| percental drop-out voltage of magnet coil related to the input voltage | 50 % |
| ON-delay time | 18 ... 34 ms |
| OFF-delay time | 10 ... 12 ms |
| **Overload relay** | |
| product function | |
| ● overload protection | Yes |
| ● phase failure detection | Yes |
| ● asymmetry detection | Yes |
| ● ground fault detection | Yes |
| ● test function | Yes |
| ● external reset | Yes |
| reset function | Manual, automatic and remote |
| trip class | CLASS 5 / 10 / 20 (factory set) / 30 |
| adjustable current response value current of the current-dependent overload release | 50 ... 200 A |
| tripping time at phase-loss maximum | 3 s |
| relative repeat accuracy | 1 % |
| product feature protective coating on printed-circuit board | Yes |
| number of NC contacts of auxiliary contacts of overload relay | 1 |
| number of NO contacts of auxiliary contacts of overload relay | 1 |
| operational current of auxiliary contacts of overload relay | |
| ● at AC at 600 V | 5 A |
| ● at DC at 250 V | 1 A |
| contact rating of auxiliary contacts of overload relay according to UL | 5A@600VAC (B600), 1A@250VDC (R300) |
| insulation voltage (Ui) | |
| ● with single-phase operation at AC rated value | 600 V |
| ● with multi-phase operation at AC rated value | 300 V |
| **Enclosure** | |
| degree of protection NEMA rating | 1 |
| design of the housing | Indoor general purpose use |
| **Mounting/wiring** | |
| mounting position | Vertical |
| fastening method | Surface mounting and installation |
| type of electrical connection for supply voltage line-side | Box lug |
| tightening torque [lbf·in] for supply | 200 ... 200 lbf·in |
| type of connectable conductor cross-sections at line-side for AWG cables single or multi-stranded | 1x(6 AWG - 250 MCM) |
| temperature of the conductor for supply maximum permissible | 75 °C |
| material of the conductor for supply | CU |
| type of electrical connection for load-side outgoing feeder | Box lug |
| tightening torque [lbf·in] for load-side outgoing feeder | 200 ... 200 lbf·in |
| type of connectable conductor cross-sections for AWG cables for load-side outgoing feeder single or multi-stranded | 1x(6 AWG - 250 MCM) |
| temperature of the conductor for load-side outgoing feeder maximum permissible | 75 °C |
| material of the conductor for load-side outgoing feeder | CU |
| type of electrical connection of magnet coil | screw-type terminals |
| tightening torque [lbf·in] at magnet coil | 5 ... 12 lbf·in |
| type of connectable conductor cross-sections of magnet coil for AWG cables single or multi-stranded | 2 x (16 - 12 AWG) |
| temperature of the conductor at magnet coil maximum permissible | 75 °C |
| material of the conductor at magnet coil | CU |
| type of electrical connection for auxiliary contacts | screw-type terminals |
| tightening torque [lbf·in] at contactor for auxiliary contacts | 10 ... 15 lbf·in |
| type of connectable conductor cross-sections at contactor for AWG cables for auxiliary contacts single or multi-stranded | 1 x (12 AWG), 2 x (16 - 14 AWG), 2 x (18 - 16 AWG) |
| temperature of the conductor at contactor for auxiliary contacts maximum permissible | 75 °C |


Subject to change without notice
© Copyright Siemens

| | |
|---|---|
| material of the conductor at contactor for auxiliary contacts | CU |
| type of electrical connection at overload relay for auxiliary contacts | screw-type terminals |
| tightening torque [lbf·in] at overload relay for auxiliary contacts | 7 ... 10 lbf·in |
| type of connectable conductor cross-sections at overload relay for AWG cables for auxiliary contacts single or multi-stranded | 2 x (20 - 14 AWG) |
| temperature of the conductor at overload relay for auxiliary contacts maximum permissible | 75 °C |
| material of the conductor at overload relay for auxiliary contacts | CU |
| **Short-circuit current rating** | |
| design of the fuse link for short-circuit protection of the main circuit required | 10kA@600V (Class H or K); 100kA@600V (Class R or J) |
| design of the short-circuit trip | Thermal magnetic circuit breaker |
| maximum short-circuit current breaking capacity (Icu) | |
| • at 240 V | 10 kA |
| • at 480 V | 10 kA |
| • at 600 V | 10 kA |
| certificate of suitability | NEMA ICS 2; UL 508; CSA 22.2, No.14 |
| **Further information** | |

**Industrial Controls - Product Overview (Catalogs, Brochures,…)**
www.usa.siemens.com/iccatalog
**Industry Mall (Online ordering system)**
https://mall.industry.siemens.com/mall/en/us/Catalog/product?mlfb=US2:14JUH32BF
**Service&Support (Manuals, Certificates, Characteristics, FAQs,...)**
https://support.industry.siemens.com/cs/US/en/ps/US2:14JUH32BF
**Image database (product images, 2D dimension drawings, 3D models, device circuit diagrams, EPLAN macros, ...)**
http://www.automation.siemens.com/bilddb/cax_de.aspx?mlfb=US2:14JUH32BF&lang=en
**Certificates/approvals**
https://support.industry.siemens.com/cs/US/en/ps/US2:14JUH32BF/certificate

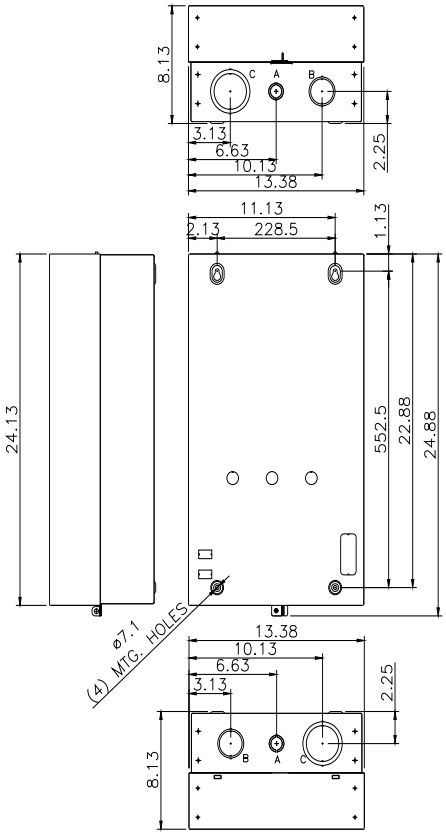


| LETTER | KNOCKOUT & CONDUIT SIZE |
|---|---|
| A | ø22.2 X ø28.6 FOR 12.7 & 19 CONDUIT |
| B | ø43.6 X ø50 FOR 31.8 & 38.1 CONDUIT |
| C | ø62.7 X ø76.2 FOR 50.8 & 63.5 CONDUIT |


Subject to change without notice
© Copyright Siemens

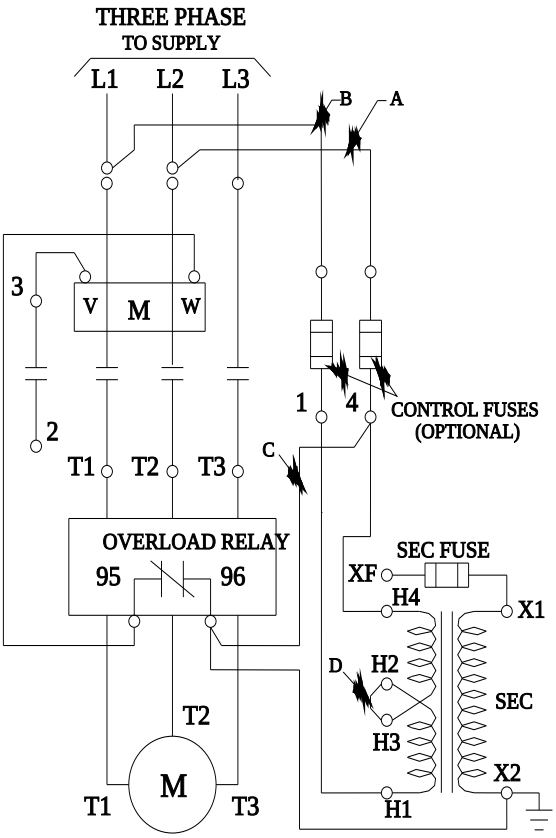


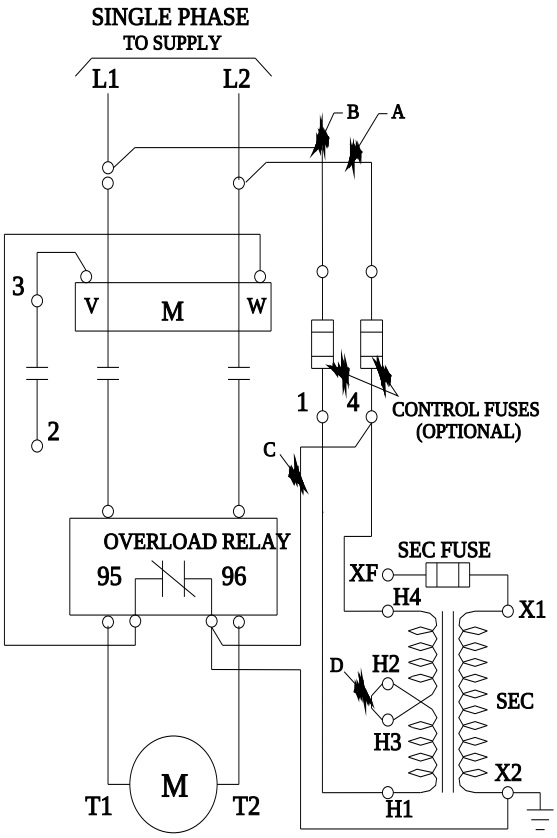


**last modified:** 11/29/2021


Subject to change without notice
© Copyright Siemens